Global Plasma Solutions

10 Mall Terrace, Bldg C Savannah, GA 31406 (912) 356-0115 ph (912) 356-0114 fax
www.globalplasmasolutions.com info@globalplasmasolutions.com

GPS-RN IOM MANUAL

Global Plasma Solutions

10 Mall Terrace, Bldg C Savannah, GA 31406 (912) 356-0115 ph (912) 356-0114 fax
www.globalplasmasolutions.com info@globalplasmasolutions.com

GPS-RN RTU/AHU INSTALLATION AND WIRING DIRECTIONS

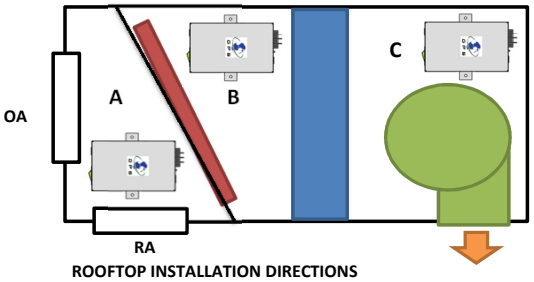

GPS-RN units may be mounted on their side or with the needles facing up or down; whichever is more convenient for the mounting location selected.

ROOFTOP INSTALLATION DIRECTIONS

1. Provide a bracket to hold the GPS-RN unit such that air flows across the needles simultaneously. See the example of two units and four units below. The primary power will determine the power supply required.
2. The preferred mounting location is "B". The second preferred location is "C" and the third preferred location is "A". Please note mounting in "A" the filter will stop the ions.

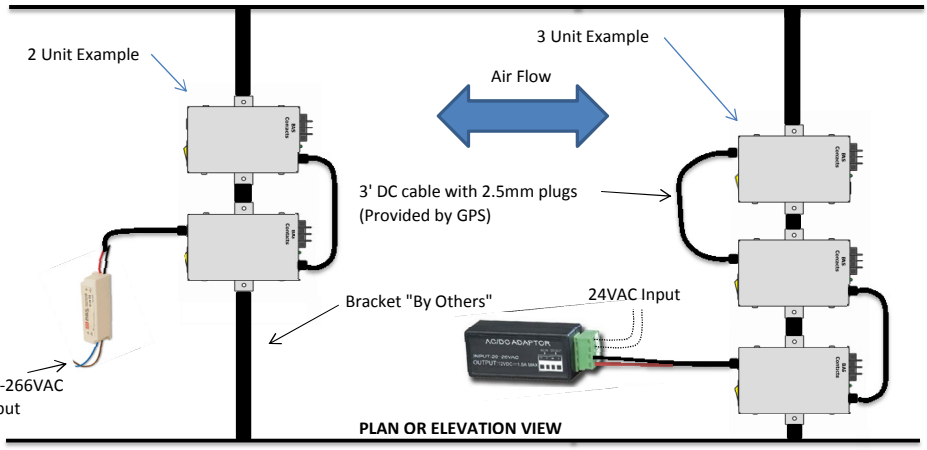

UNIT WIRING INSTRUCTIONS

1. Mount the GPS-RN unit to a bracket, provided by others.
2. Use the power supply required for the primary power, i.e., 24VAC input or 90VAC to 266VAC input.
3. Secure the power supply in the RTU/AHU control panel or junction box, provided by others.
4. Plenum rated DC power cables will be provided by Global Plasma Solutions with each system.
5. If the 24VAC input power supply is required, wire the DC power cord's stripped leads into the terminal. The terminal block is marked to show the positive and negative output. Wire nuts are required for the 90-266V input power supply. Wire nuts are provided by others. Follow local and national electric codes.
6. Connect the 2.5mm DC power plug into the first GPS-RN unit as shown.
7. If the system contains more than one GPS-RN unit, 3' DC power cables will be provided with 2.5mm plugs on both ends. Simply plug the cable into the jacks as shown in the above samples.
8. All DC power jacks on the GPS-RN units are wired in parallel internally so there are no in/out requirements.
9. Push wire through extensions and hand tighten to threaded nipple.

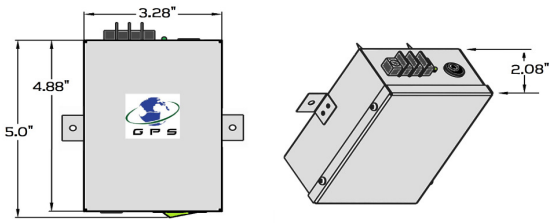

UNIT DIMENSIONS IN INCHES

Global Plasma Solutions

10 Mall Terrace, Bldg C Savannah, GA 31406 (912) 356-0115 ph (912) 356-0114 fax
www.globalplasmasolutions.com info@globalplasmasolutions.com

GPS-RN RTU/AHU INSTALLATION AND WIRING DIRECTIONS

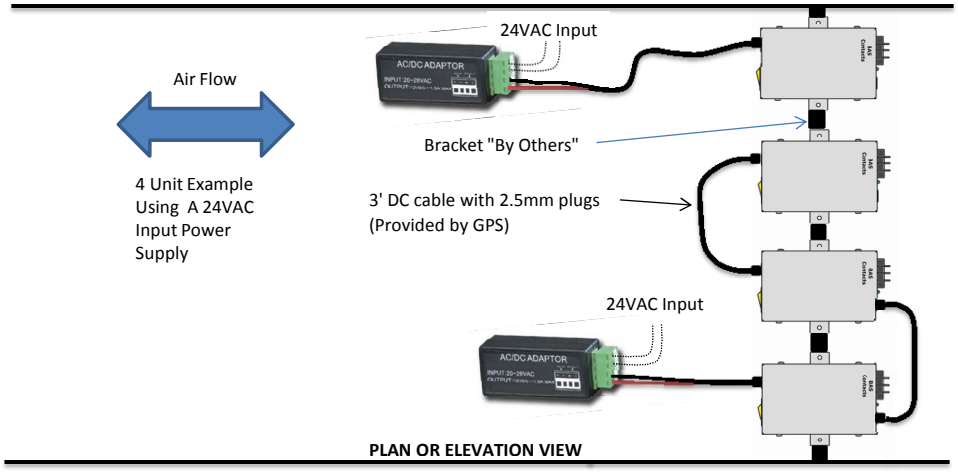

GPS-RN units may be mounted on their side or with the needles facing up or down; whichever is more convenient for the mounting location selected.

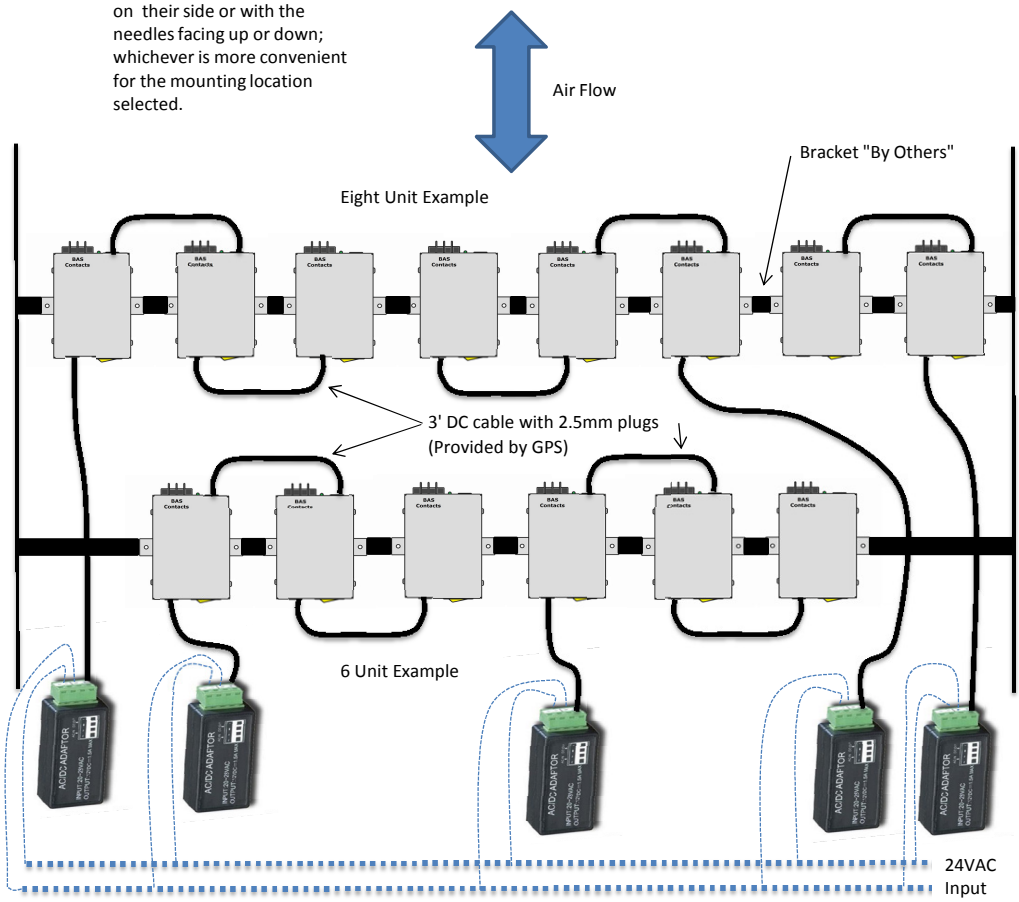

IMPORTANT NOTES:
GPS power supply models GPS-P2412, GPS-UP12 and GPS-UPW12 can only power up to 3 GPS-RN modules.

Global Plasma Solutions

10 Mall Terrace, Bldg C Savannah, GA 31406 (912) 356-0115 ph (912) 356-0114 fax
www.globalplasmasolutions.com info@globalplasmasolutions.com

GPS-RN DUCT INSTALLATION AND WIRING DIRECTIONS

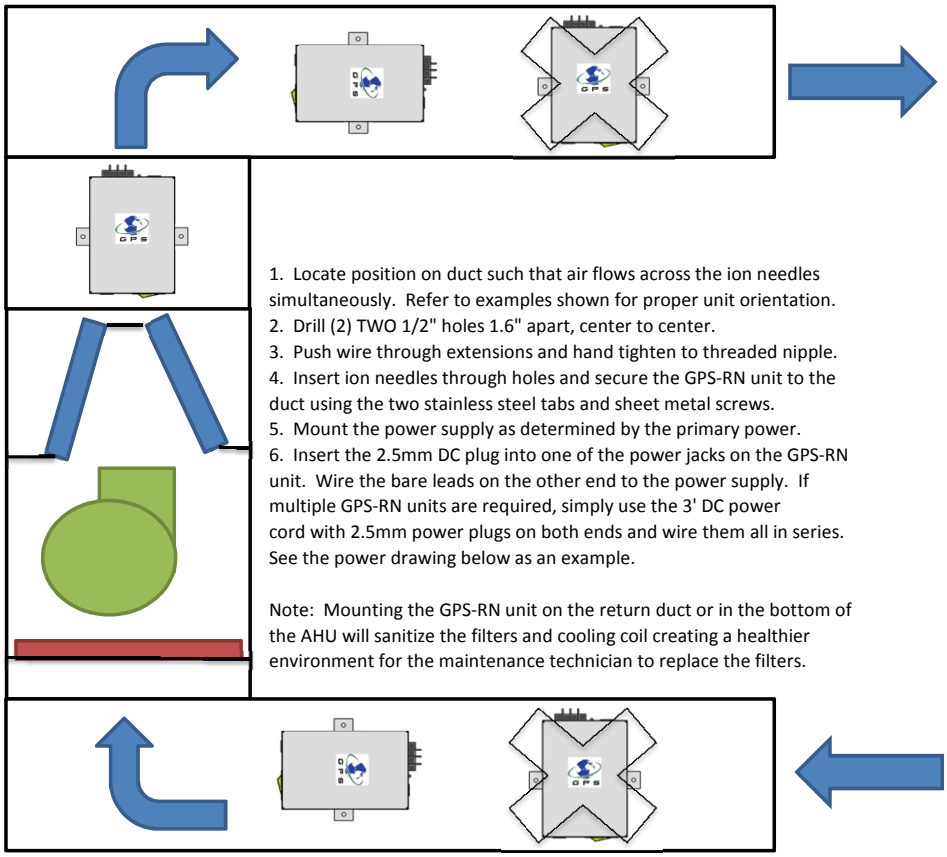

1. Locate position on duct such that air flows across the ion needles simultaneously. Refer to examples shown for proper unit orientation.
2. Drill (2) TWO 1/2" holes 1.6" apart, center to center.
3. Push wire through extensions and hand tighten to threaded nipple.
4. Insert ion needles through holes and secure the GPS-RN unit to the duct using the two stainless steel tabs and sheet metal screws.
5. Mount the power supply as determined by the primary power.
6. Insert the 2.5mm DC plug into one of the power jacks on the GPS-RN unit. Wire the bare leads on the other end to the power supply. If multiple GPS-RN units are required, simply use the 3' DC power cord with 2.5mm power plugs on both ends and wire them all in series. See the power drawing below as an example.

Note: Mounting the GPS-RN unit on the return duct or in the bottom of the AHU will sanitize the filters and cooling coil creating a healthier environment for the maintenance technician to replace the filters.

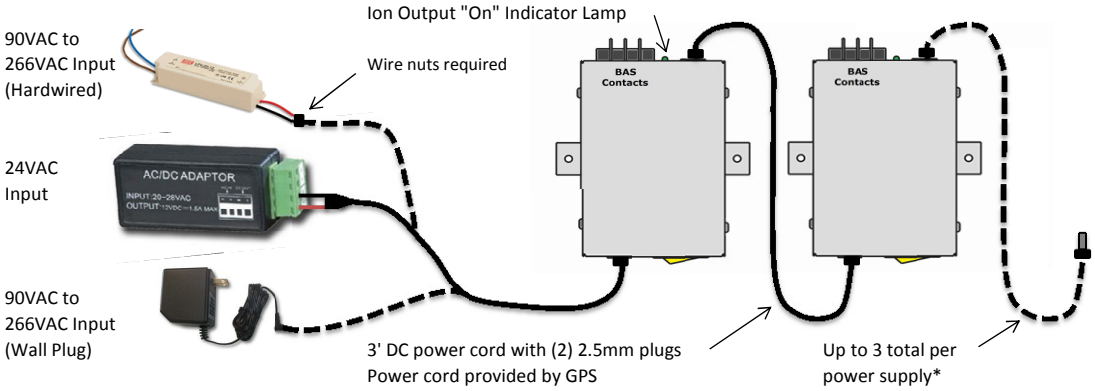

NOTE: Only one power supply will be provided per AHU/duct. All three options are shown for illustration purposes
* Power supplies shown can only power up to three GPS-RN units on a single circuit. Multiple power supplies with multiple circuits will be required. Contact factory for power supplies to power more than three GPS-RN units.
** 24VAC power supply must have a floating 24VAC input. DO NOT ground either leg of the 24VAC power.

Global Plasma Solutions

10 Mall Terrace, Bldg C Savannah, GA 31406 (912) 356-0115 ph (912) 356-0114 fax
www.globalplasmasolutions.com info@globalplasmasolutions.com

GPS-RN BAS INTERFACE

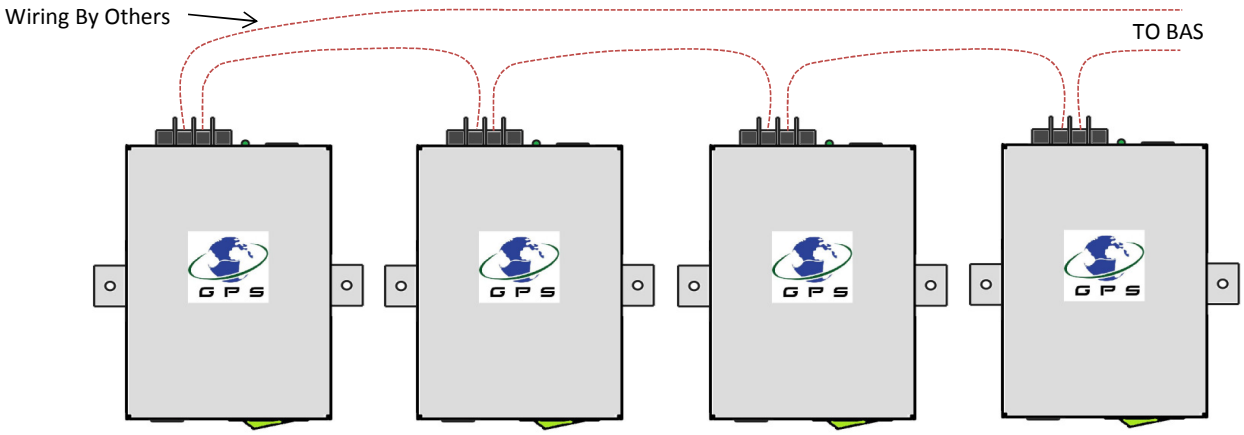

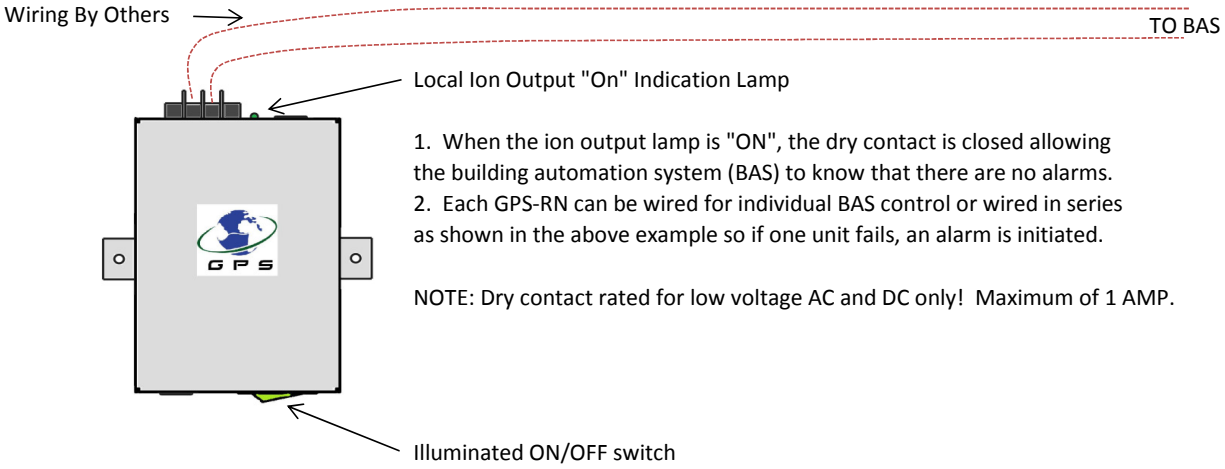

1. When the ion output lamp is "ON", the dry contact is closed allowing the building automation system (BAS) to know that there are no alarms.
2. Each GPS-RN can be wired for individual BAS control or wired in series as shown in the above example so if one unit fails, an alarm is initiated.

NOTE: Dry contact rated for low voltage AC and DC only! Maximum of 1 AMP.

Global Plasma Solutions

10 Mall Terrace, Bldg C Savannah, GA 31406 (912) 356-0115 ph (912) 356-0114 fax
www.globalplasmasolutions.com info@globalplasmasolutions.com

OPERATION / TROUBLESHOOTING

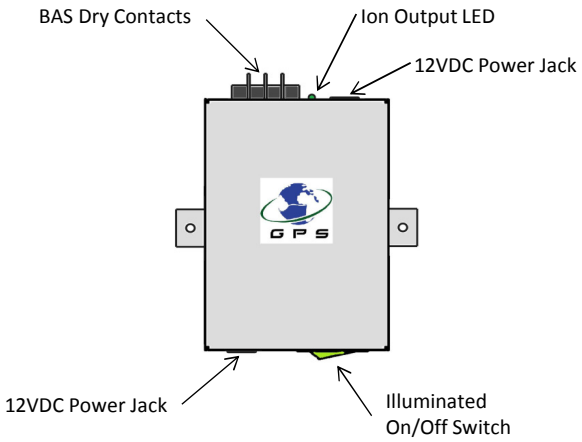

Standard Operation

1. Provide 12VDC power to either power jack. The center pin requires the 12V+ and the outer pin requires the negative connection.
2. Up to three units may be powered in series using 2.5mm DC power cables provided by GPS.
3. The BAS Dry Contacts may be wired in series with no limit to the number of units that can be used.
4. Once 12VDC power is applied, turn the On/Off switch to the "On" position. The On/Off switch will now illuminate.
5. Once the On/Off switch is turned to the "On" position, upon no faults, the ion output LED will illuminate.
6. When the ion output LED is illuminated, the BAS dry contact will closed.

Troubleshooting

1. Confirm 12VDC is being supplied to the power jack. The center pin requires the 12V+ and the outer pin requires the negative connection.
2. Confirm only up to three units are being powered in series using 2.5mm DC power cables provided by GPS.
3. Confirm the On/Off Switch is in the "On" position and illuminated.
4. If On/Off switch is "On" and illuminated, 12VDC jack has power and polarity is correct, but the ion LED light is off, the unit must be returned to the factory and a replacement provided.
5. If the ion output LED is on, the BAS dry contacts will be closed. If the ion output LED is off, the BAS dry contacts will be open.
6. Please note that the ion output LED and BAS dry contacts are linked directly to the output side of the ion circuit. If the ion output LED is on and/or the BAS dry contact is closed, there will be voltage output to the ion needles.
7. If all components are functioning properly, but the ion count at the supply diffuser is less than 1,000 ions/cm, use a cotton ball with rubbing alcohol and wipe off the ion needles. Needle oxidation may have occurred, resulting in ion output reduction.

CAUTION

1. NEVER TOUCH ION NEEDLES WHILE OPERATING. SHOCK MAY OCCUR.
2. GPS-RN SHOULD NEVER BE CONNECTED WITH AN EXTENSION CORD.
3. DO NOT CONNECT POWER BEFORE INSTALLATION IS COMPLETE. ALWAYS DISCONNECT POWER TO THE UNIT BEFORE HANLDING ANY OF THE UNIT COMPONENTS OR SERVICING.
4. THIS PRODUCT SHALL NOT BE INSTALLED BEHIND A SUSPENDED FLOOR/CEILING, OR A STRUCTURAL WALL, CEILING OR FLOOR.
5. THIS PRODUCT IS SUITABLE FOR MOUNTING INTO A DUCT OF METALLIC CONSTRUCTION ONLY.
6. PRODUCT SHOULD BE MOUNTED SUCH THAT THE POWER SUPPLIES CAN BE POWERED WITHOUT THE USE OF AN EXTENSION CORD. FOLLOW ALL LOCAL AND NATIONAL ELECTRIC CODES WHEN WIRING.

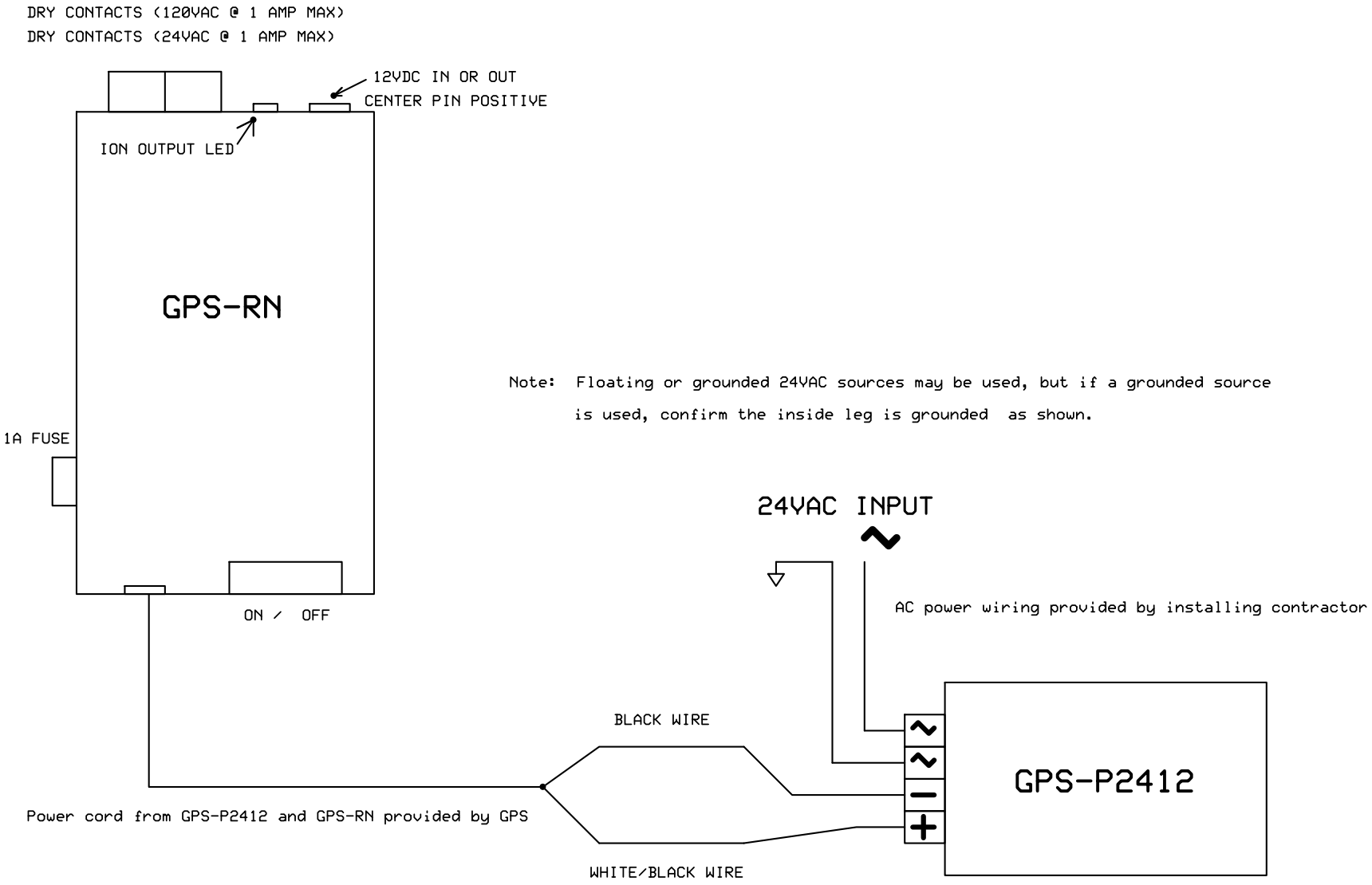

Global Plasma Solutions		
GPS-RN & GPS-P2412 WIRING		
JAC	Rev 1.0 5/3/2010	Sheet 1

GPS-RN One to Three Unit Wiring

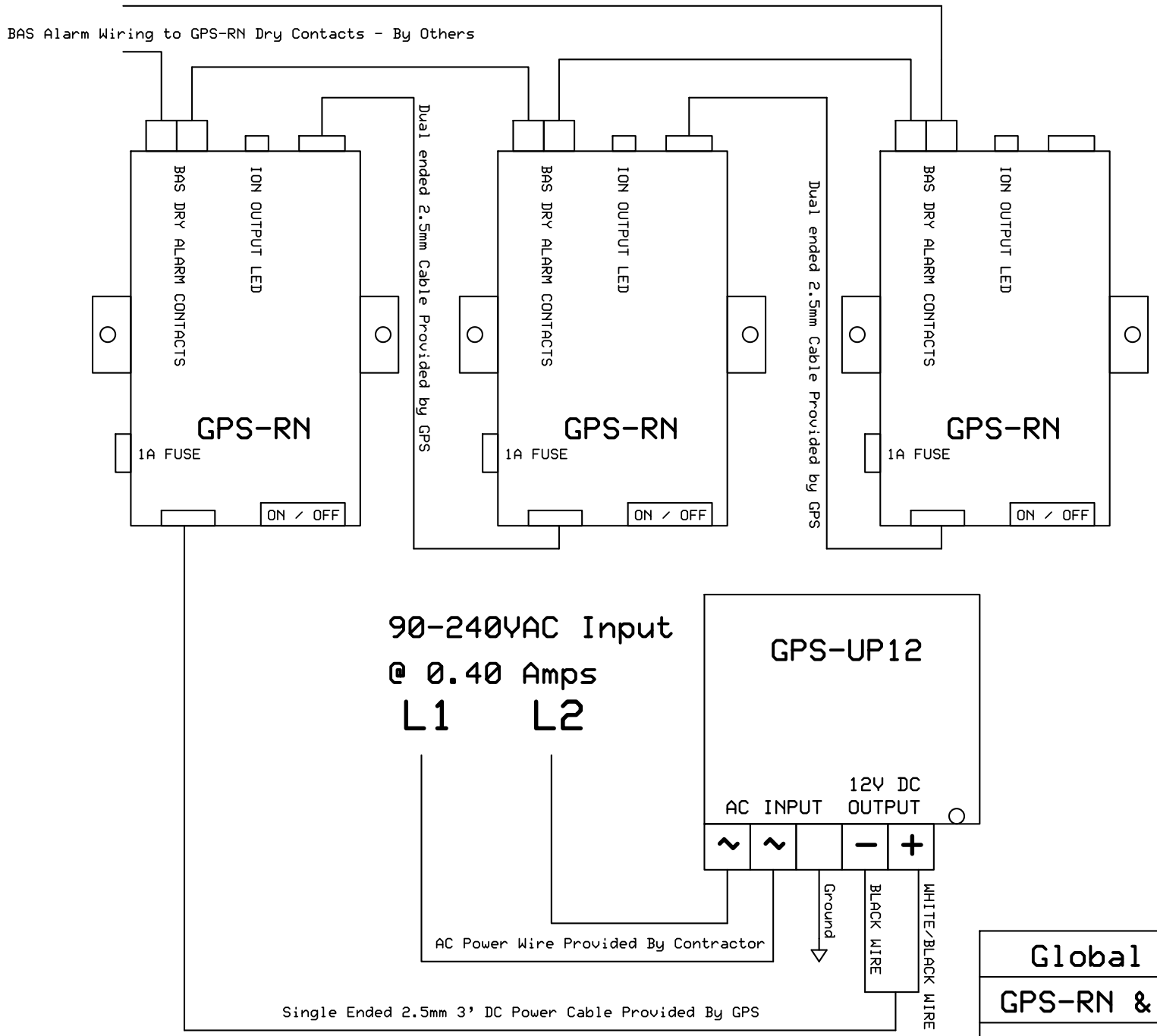

Global Plasma Solutions		
GPS-RN & UP12 Power Supply		
JAC	Rev 1.0 5/3/2010	GPSRN UP12

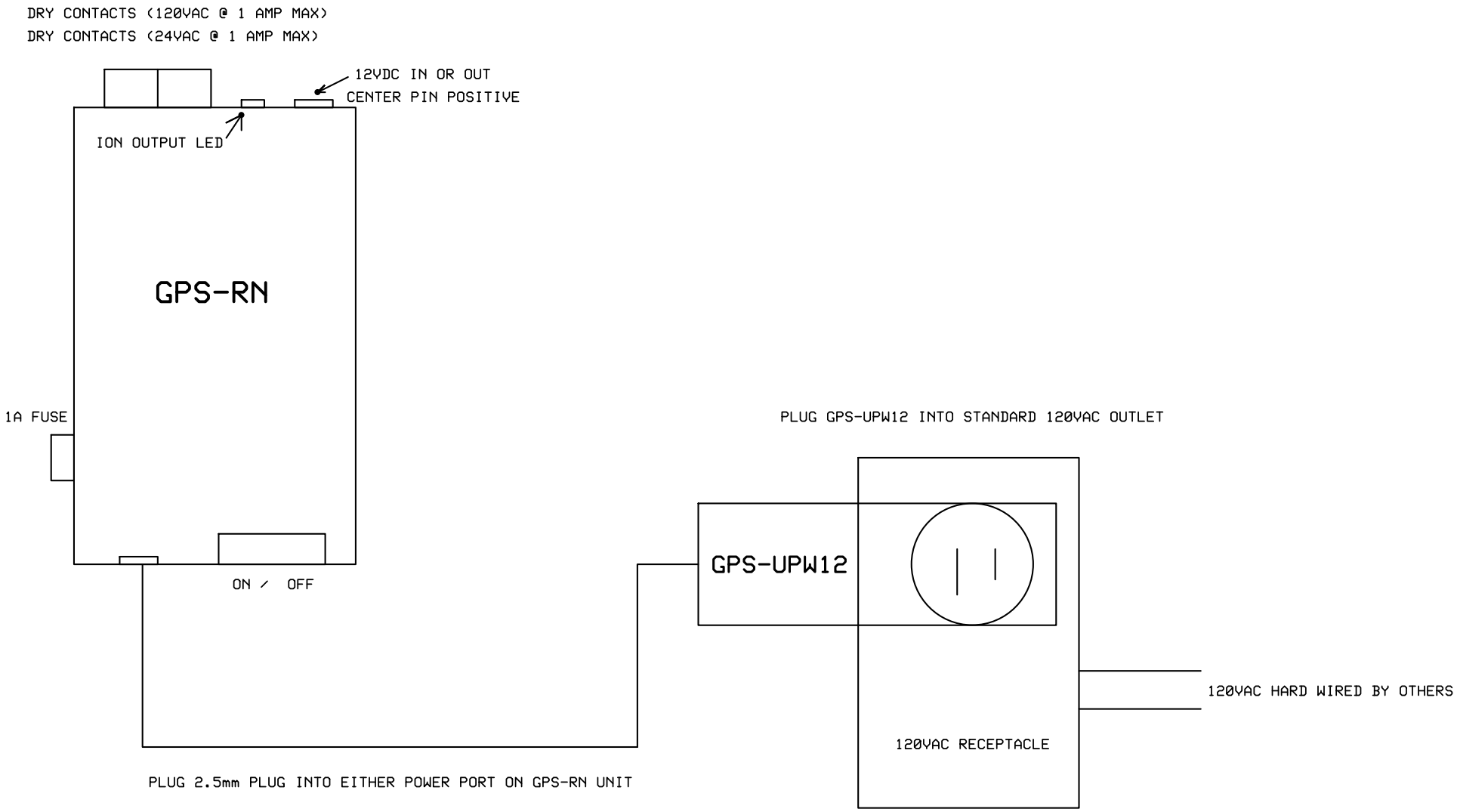

Global Plasma Solutions		
GPS-RN & GPS-UPW12 WIRING		
JAC	Rev 1.0 5/3/2010	Sheet 1